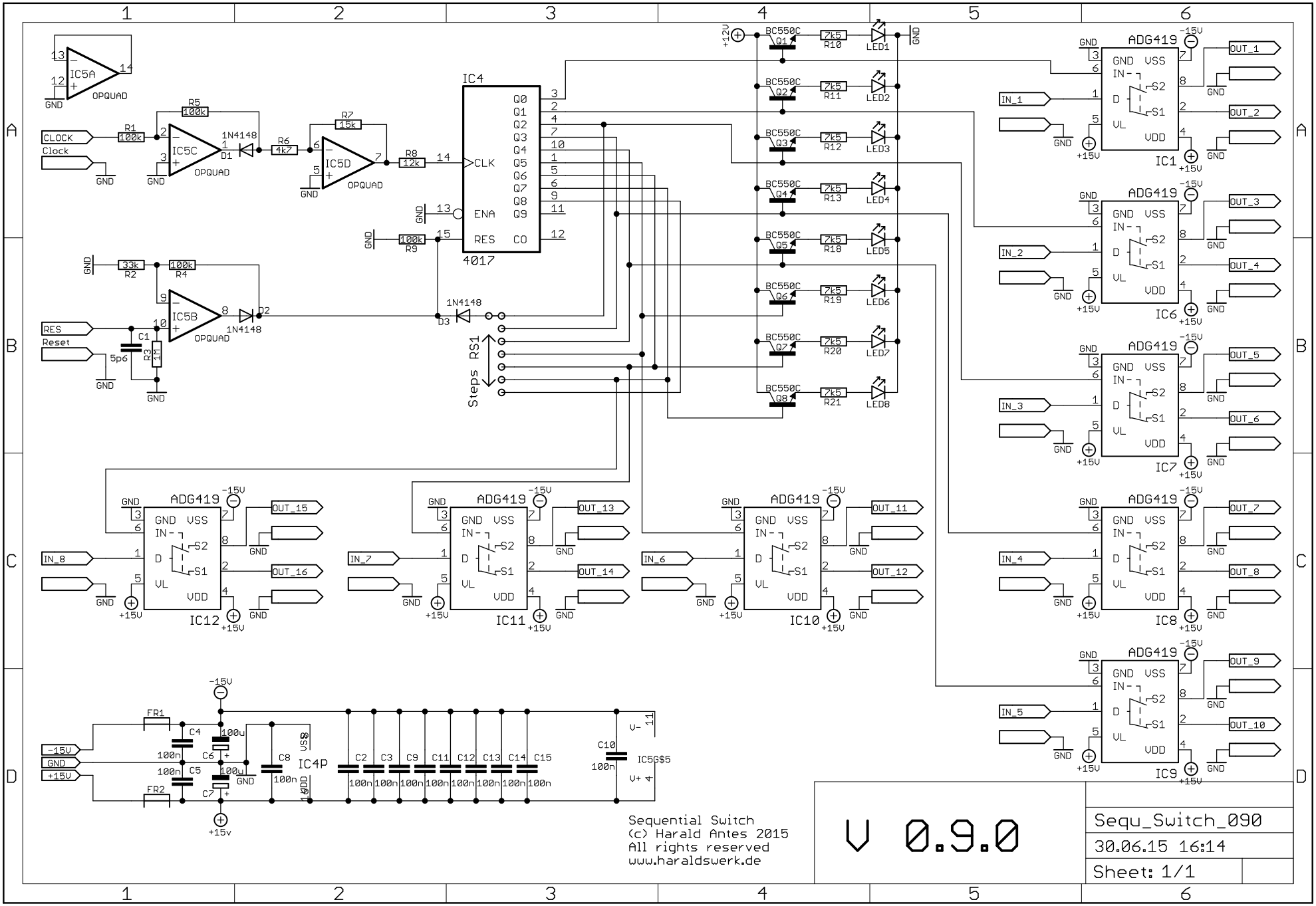
IC5A
OPQUAD
CLOCK
Clock
R1 100k
R5 100k
IC5C
1N4148
D1
R6 4k7
R7 15k
IC5D
R8 12k
IC4
CLK
ENA
RES
CO
Q0 Q1 Q2 Q3 Q4 Q5 Q6 Q7 Q8 Q9
4017
R9 100k
RES
Reset
R2 33k
R4 100k
IC5B
D2
D3
C1 5p6
R3 1M
Steps
RS1
BC550C
R10 7k5
R11 7k5
R12 7k5
R13 7k5
R18 7k5
R19 7k5
R20 7k5
R21 7k5
LED1
LED2
LED3
LED4
LED5
LED6
LED7
LED8
ADG419
IN_1
IN_2
IN_3
IN_4
IN_5
IN_6
IN_7
IN_8
OUT_1
OUT_2
OUT_3
OUT_4
OUT_5
OUT_6
OUT_7
OUT_8
OUT_9
OUT_10
OUT_11
OUT_12
OUT_13
OUT_14
OUT_15
OUT_16
IC1
IC6
IC7
IC8
IC9
IC10
IC11
IC12
FR1
FR2
C4 100n
C5 100n
C6 100u
C7 100u
C8 100n
IC4P
C2 C3 C9 C11 C12 C13 C14 C15
C10 100n
IC5G$5
Sequential Switch
(c) Harald Antes 2015
All rights reserved
www.haraldswerk.de
V 0.9.0
Sequ_Switch_090
30.06.15 16:14
Sheet: 1/1