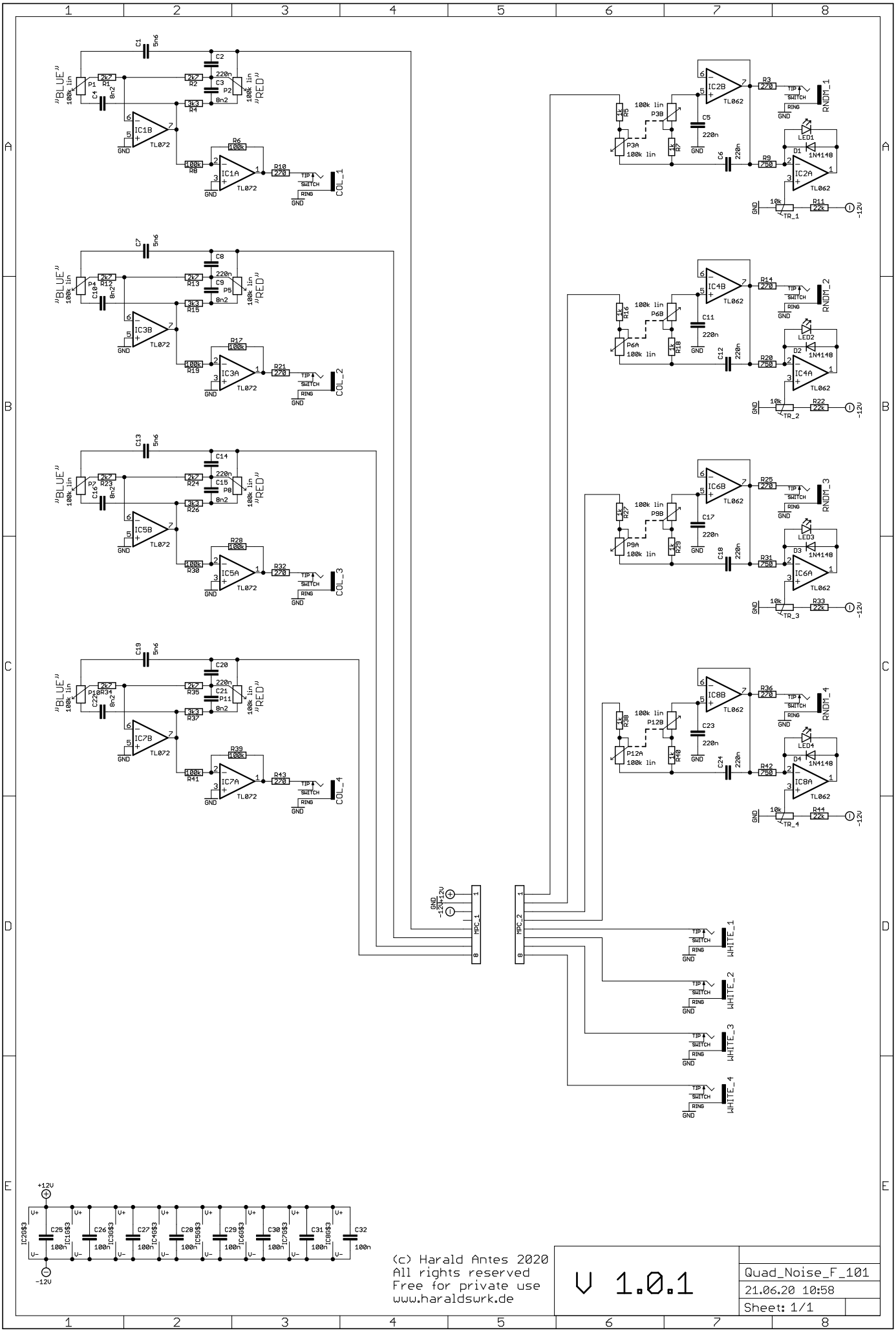


(c) Harald Antes 2020
All rights reserved
Free for private use
www.haraldswrk.de

V 1.0.1

Quad_Noise_F_101
21.06.20 10:58
Sheet: 1/1