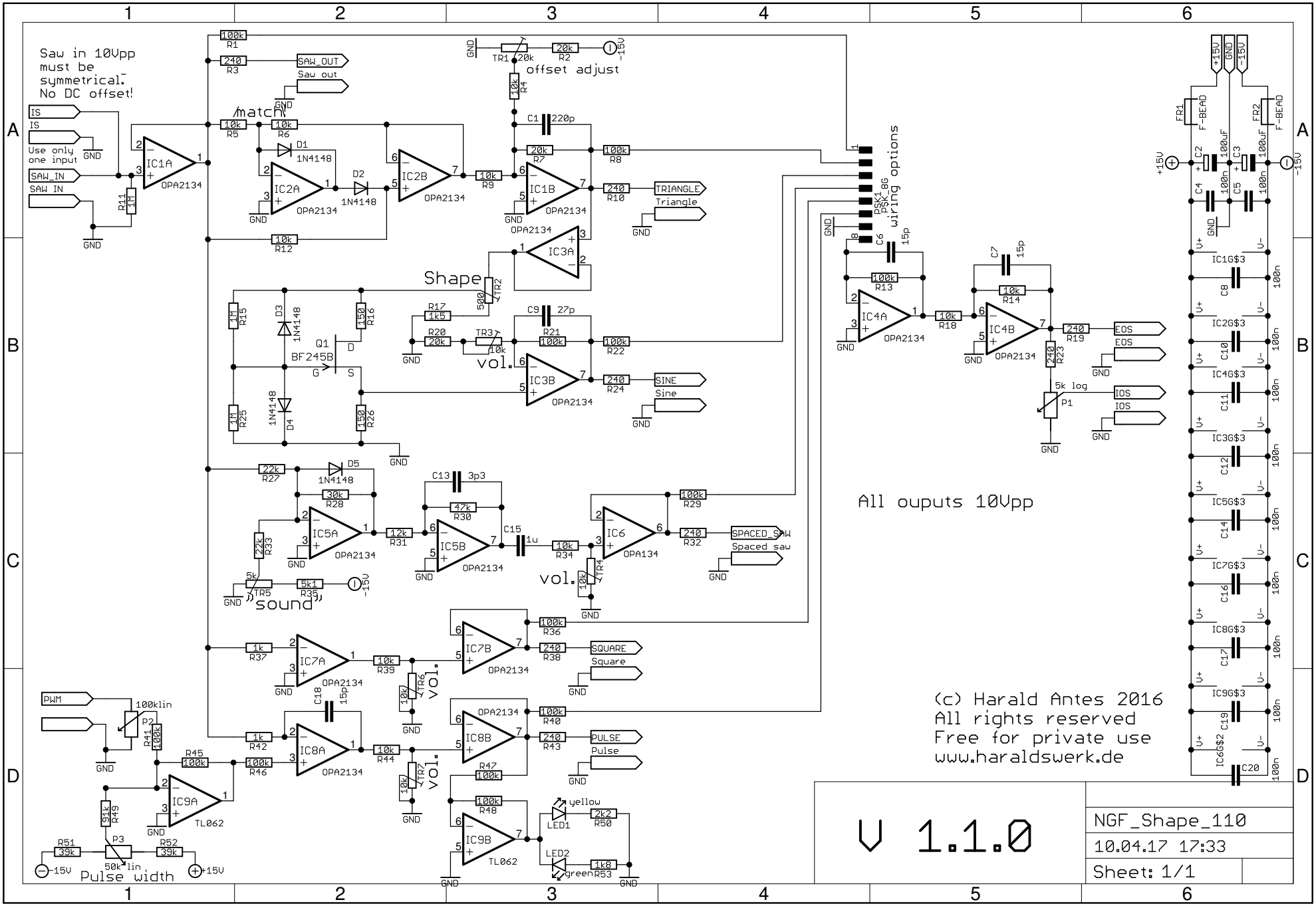
Saw in 10Vpp must be symmetrical. No DC offset!
IS
IS
Use only one input
SAW_IN
SAW IN
IC1A
OPA2134
R11 1M
GND
R1 100k
R3 240
SAW_OUT
Saw out
R5 10k
R6 10k
match
D1 1N4148
D2 1N4148
IC2A
IC2B
R9 10k
R12 10k
TR1 20k
R2 20k
-15V
offset adjust
R4 10k
C1 220p
R7 20k
R8 100k
IC1B
R10 240
TRIANGLE
Triangle
IC3A
Shape
TR2 500
R15 1M
D3 1N4148
R16 150
Q1 BF245B
D
G
S
R25 1M
D4 1N4148
R26 150
R17 1k5
R20 20k
TR3 10k
vol.
C9 27p
R21 100k
R22 100k
IC3B
R24 240
SINE
Sine
R27 22k
D5 1N4148
R28 30k
IC5A
R33 22k
TR5 5k
R35 5k1
sound
R31 12k
C13 3p3
R30 47k
IC5B
C15 1u
R34 10k
TR4 10k
IC6
R29 100k
R32 240
SPACED_SAW
Spaced saw
R37 1k
IC7A
R39 10k
TR6 10k
IC7B
R36 100k
R38 240
SQUARE
Square
PWM
100klin
P2
R41 100k
R42 1k
C18 15p
IC8A
R44 10k
TR7 10k
IC8B
R40 100k
R43 240
PULSE
Pulse
R45 100k
R46 100k
IC9A
TL062
R49 91k
R47 100k
R48 100k
IC9B
LED1
yellow
R50 2k2
LED2
green
R53 1k8
R51 39k
P3 50k lin
R52 39k
-15V
+15V
Pulse width
PSK1 PSK_8G
wiring options
C6 15p
R13 100k
IC4A
R18 10k
C7 15p
R14 10k
IC4B
R19 240
EOS
EOS
R23 240
5k log
P1
IOS
IOS
All ouputs 10Vpp
FR1 F-BEAD
FR2 F-BEAD
C2 100uF
C3 100uF
C4 100n
C5 100n
IC1G$3
IC2G$3
IC4G$3
IC3G$3
IC5G$3
IC7G$3
IC8G$3
IC9G$3
IC6G$2
C8
C10
C11
C12
C14
C16
C17
C19
C20
(c) Harald Antes 2016
All rights reserved
Free for private use
www.haraldswerk.de
V 1.1.0
NGF_Shape_110
10.04.17 17:33
Sheet: 1/1